DIMENSIONS

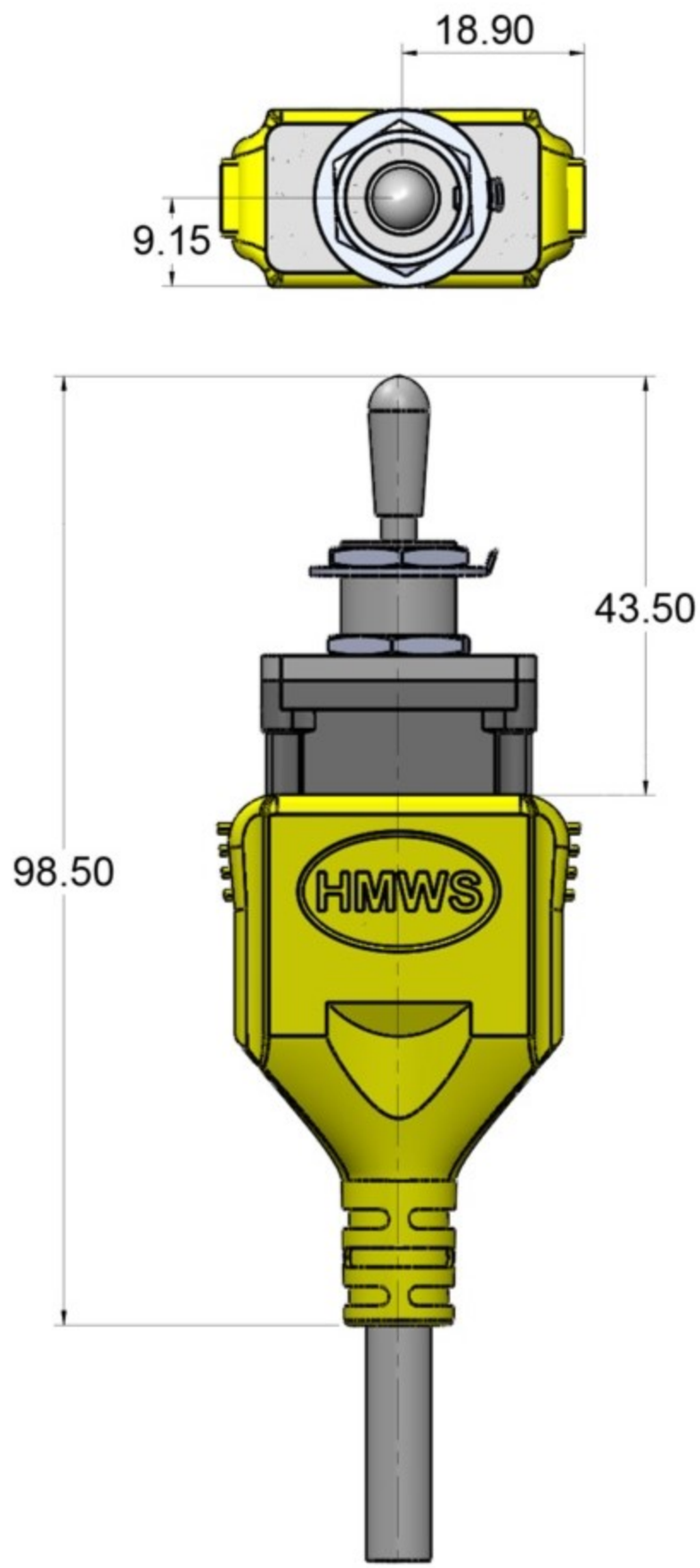
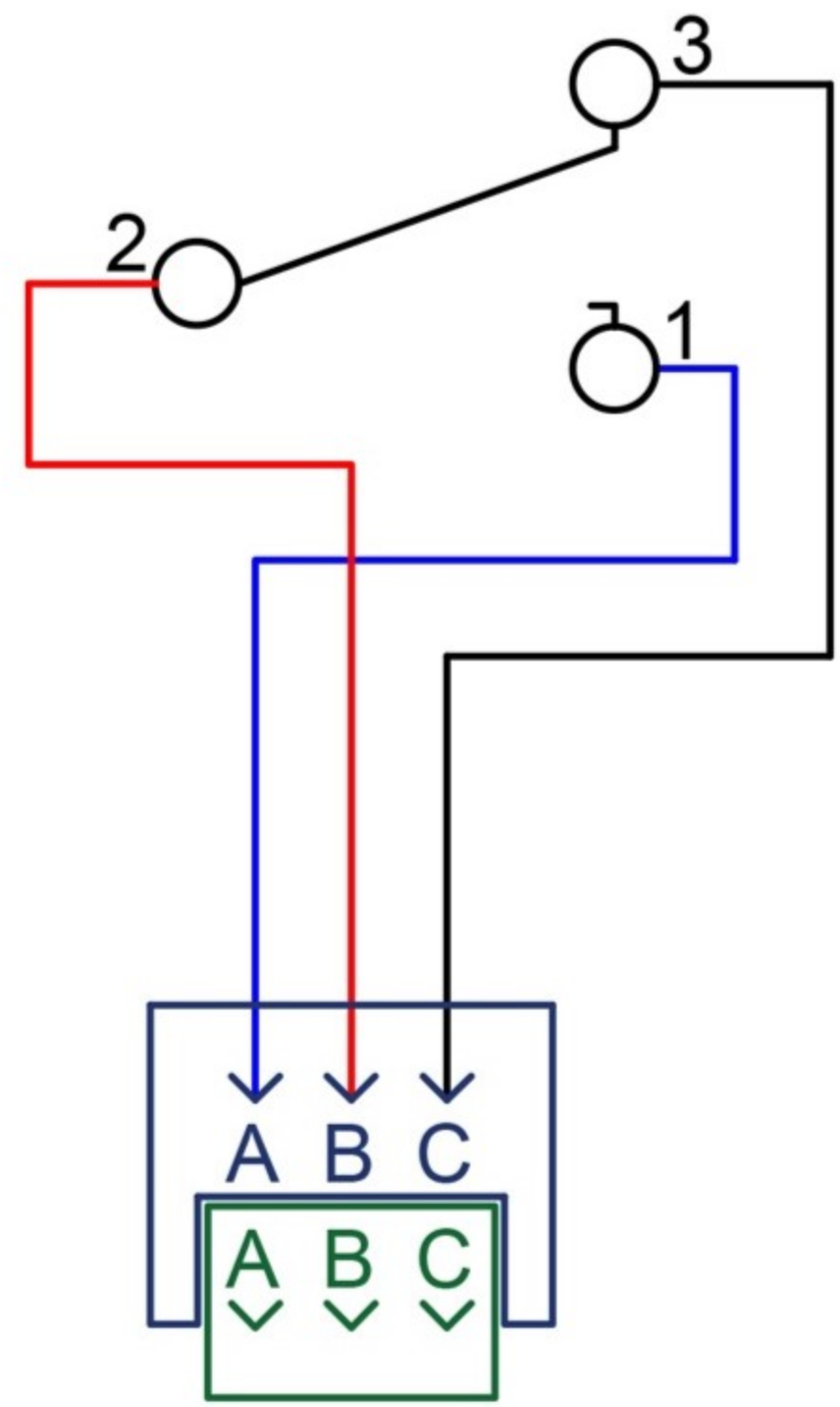
CIRCUIT DIAGRAM