DIMENSIONS

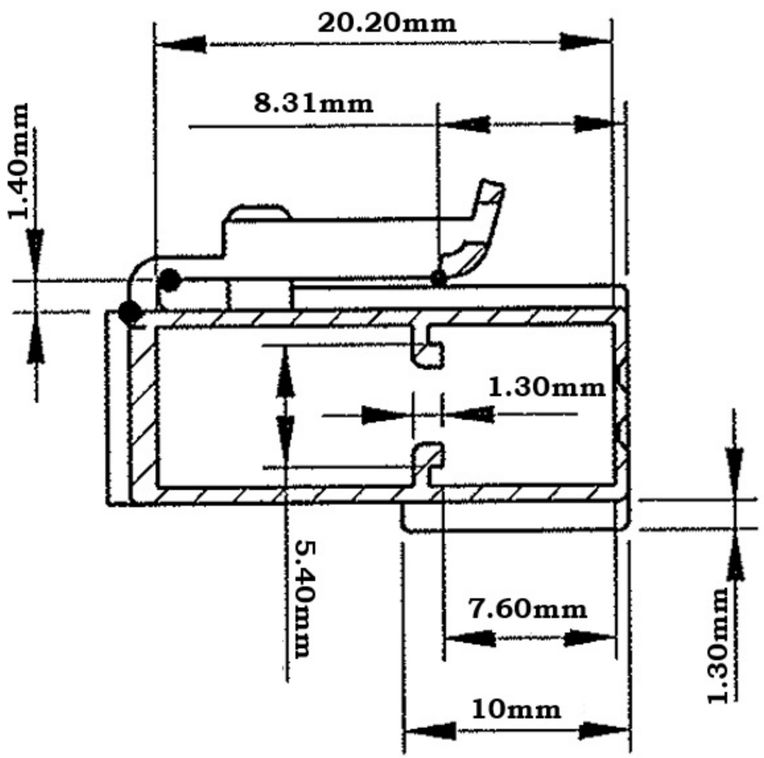
20.20mm
8.31mm
1.40mm
1.30mm
5.40mm
7.60mm
1.30mm
10mm

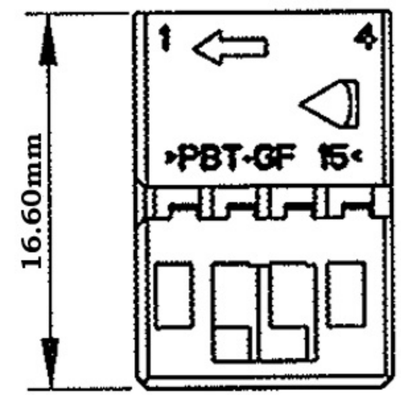
1
4
•PBT-GF 15•
16.60mm

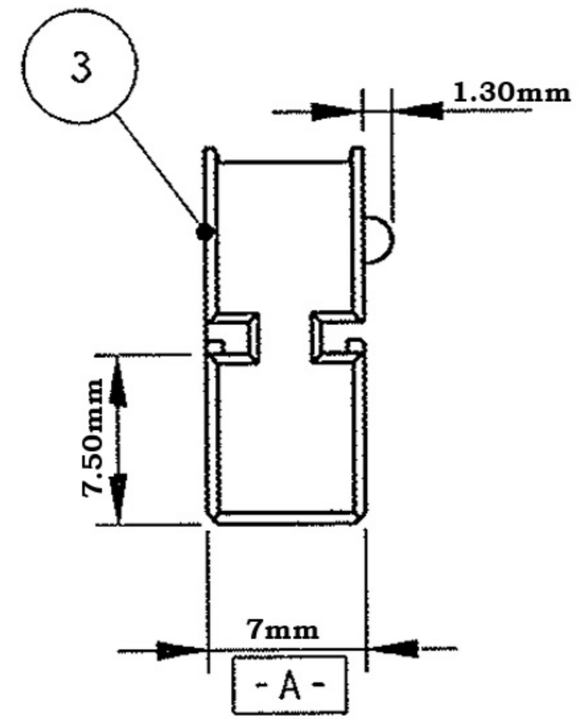
3
1.30mm
7.50mm
7mm
-A-

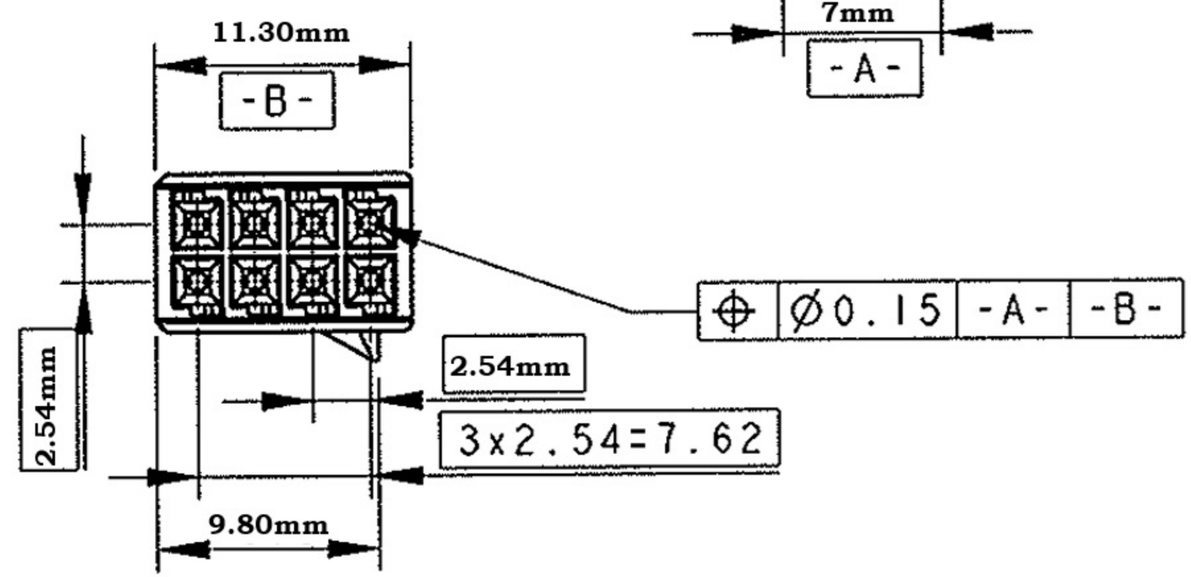
11.30mm
-B-
⌖ Ø0.15 -A- -B-
2.54mm
2.54mm
3x2.54=7.62
9.80mm