DIMENSIONS

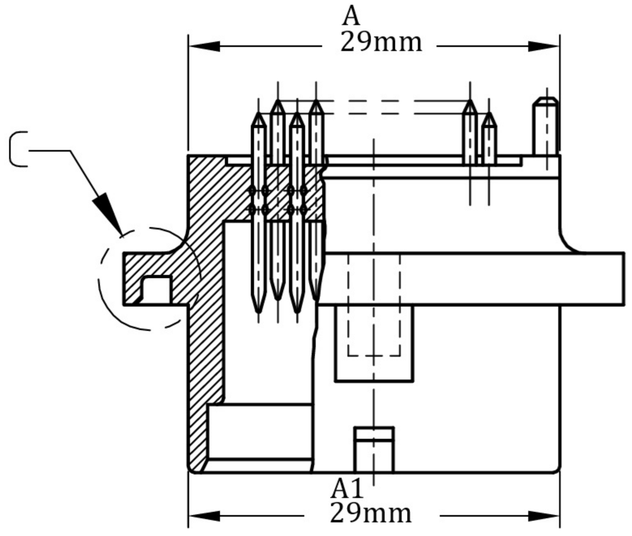
A
29mm
C
A1
29mm

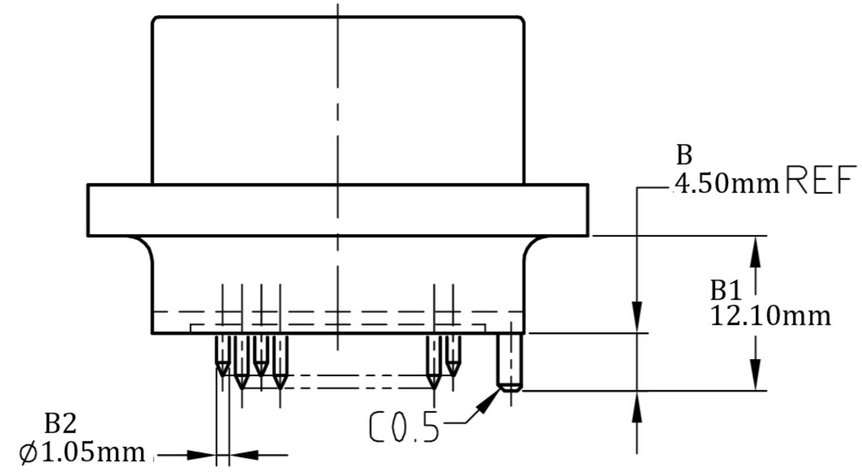
B
4.50mm REF
B1
12.10mm
B2
Ø1.05mm
C0.5

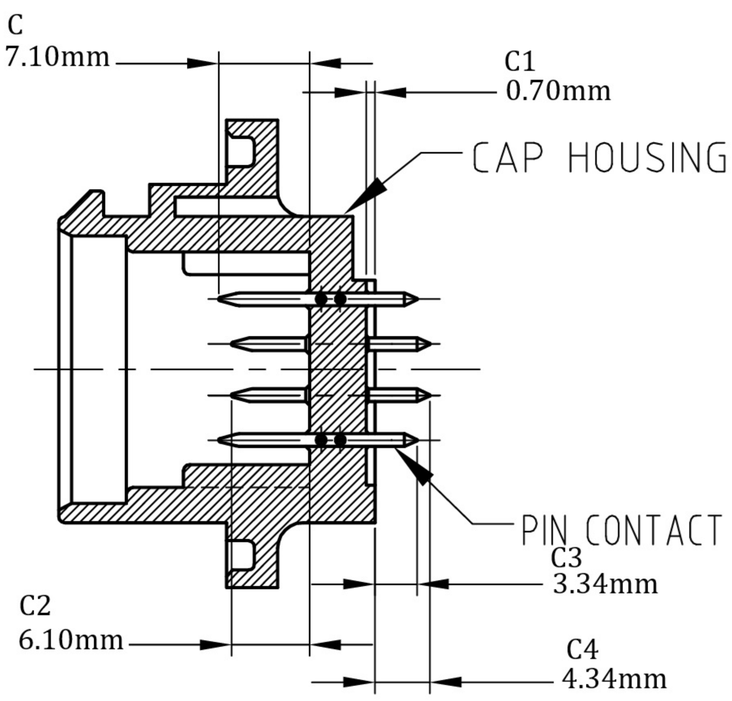
C
7.10mm
C1
0.70mm
CAP HOUSING
PIN CONTACT
C3
3.34mm
C2
6.10mm
C4
4.34mm

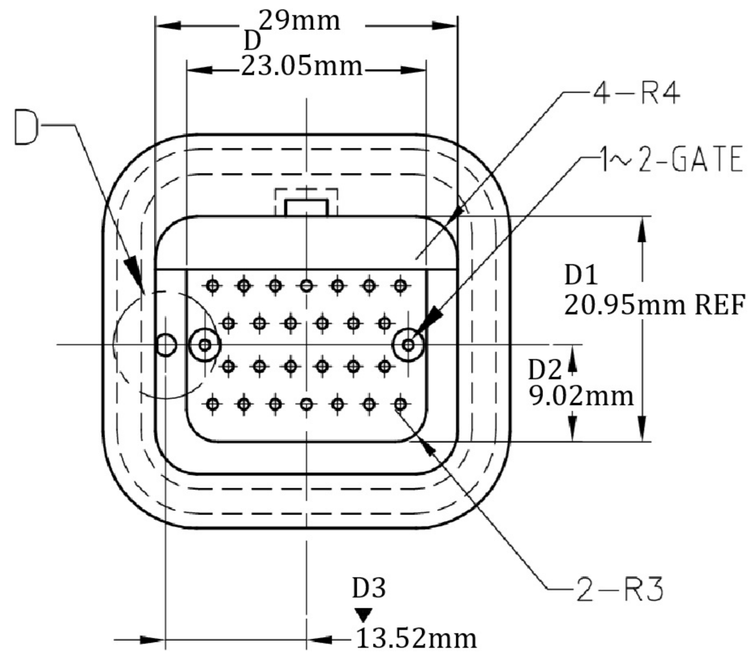
29mm
D
23.05mm
D
4-R4
1~2-GATE
D1
20.95mm REF
D2
9.02mm
2-R3
D3
13.52mm

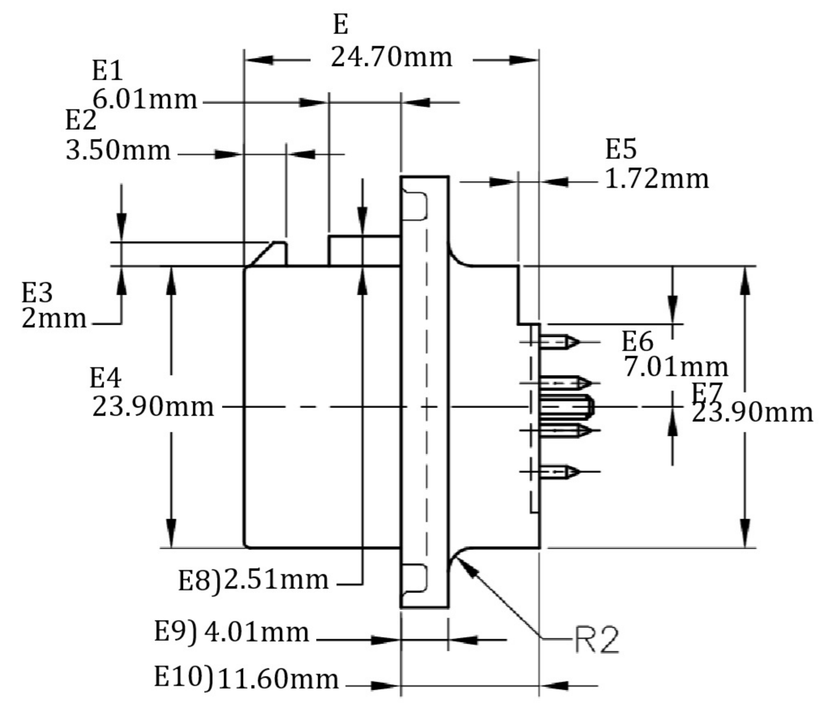
E
24.70mm
E1
6.01mm
E2
3.50mm
E5
1.72mm
E3
2mm
E6
7.01mm
E4
23.90mm
E7
23.90mm
E8)2.51mm
E9) 4.01mm
E10)11.60mm
R2