DIMENSIONS

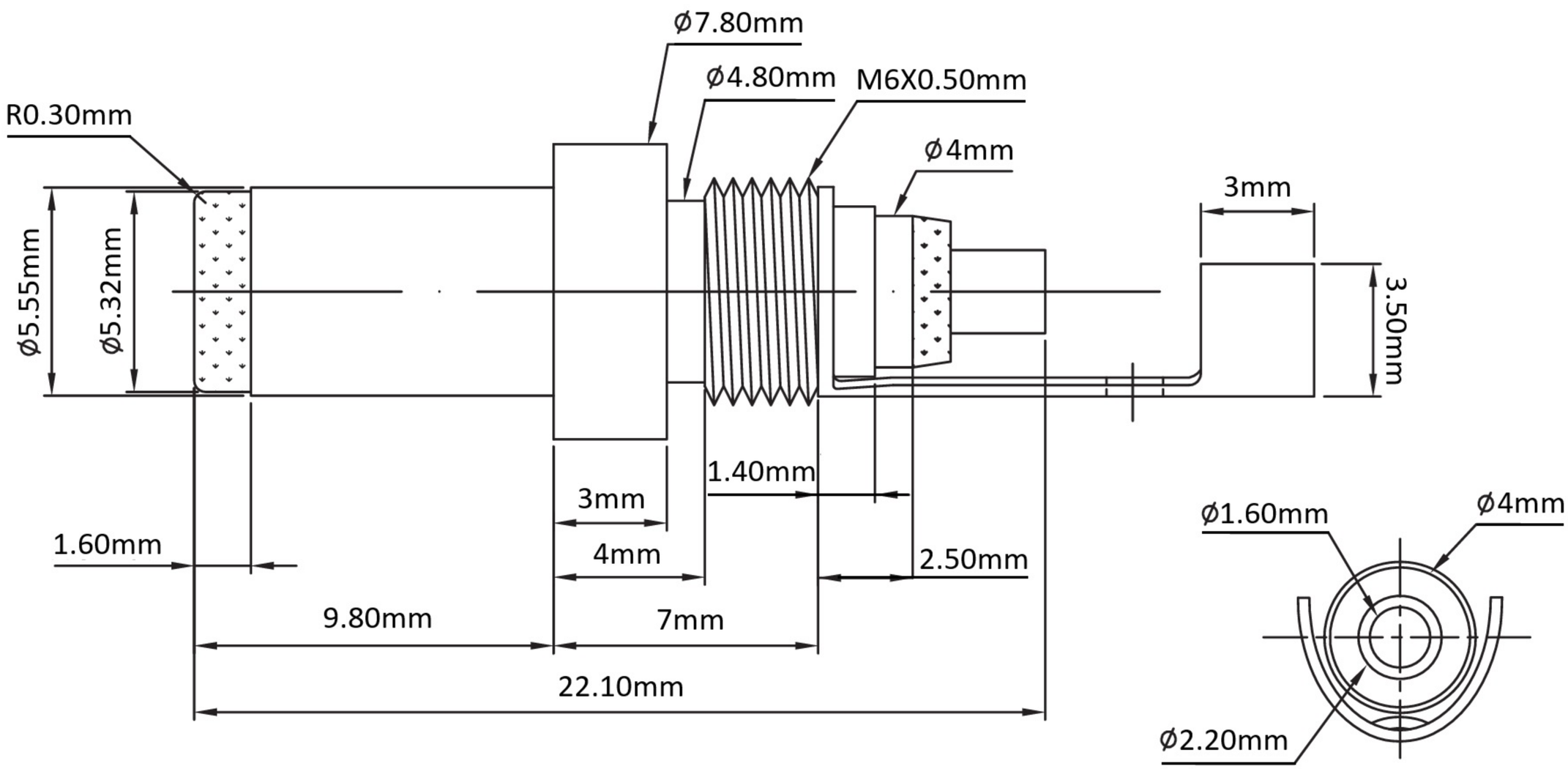
Ø7.80mm
Ø4.80mm
M6X0.50mm
R0.30mm
Ø4mm
3mm
Ø5.55mm
Ø5.32mm
3.50mm
1.40mm
3mm
Ø1.60mm
Ø4mm
1.60mm
4mm
2.50mm
9.80mm
7mm
22.10mm
Ø2.20mm

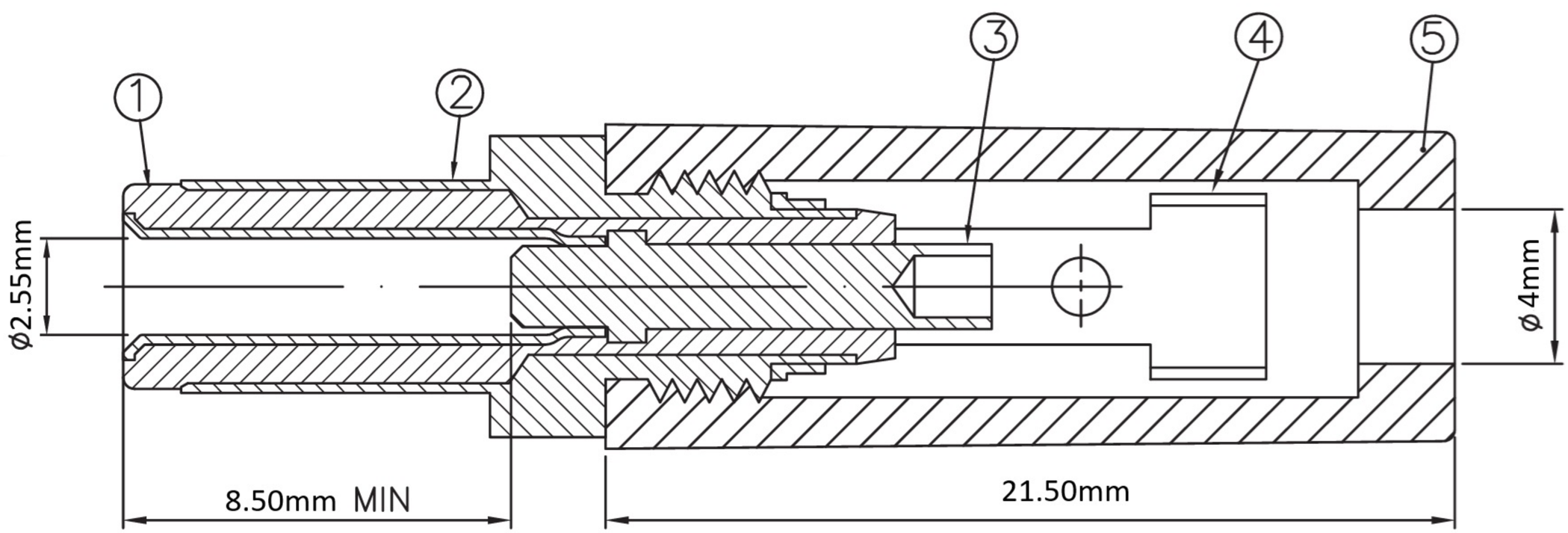
1
2
3
4
5
Ø2.55mm
Ø4mm
8.50mm MIN
21.50mm