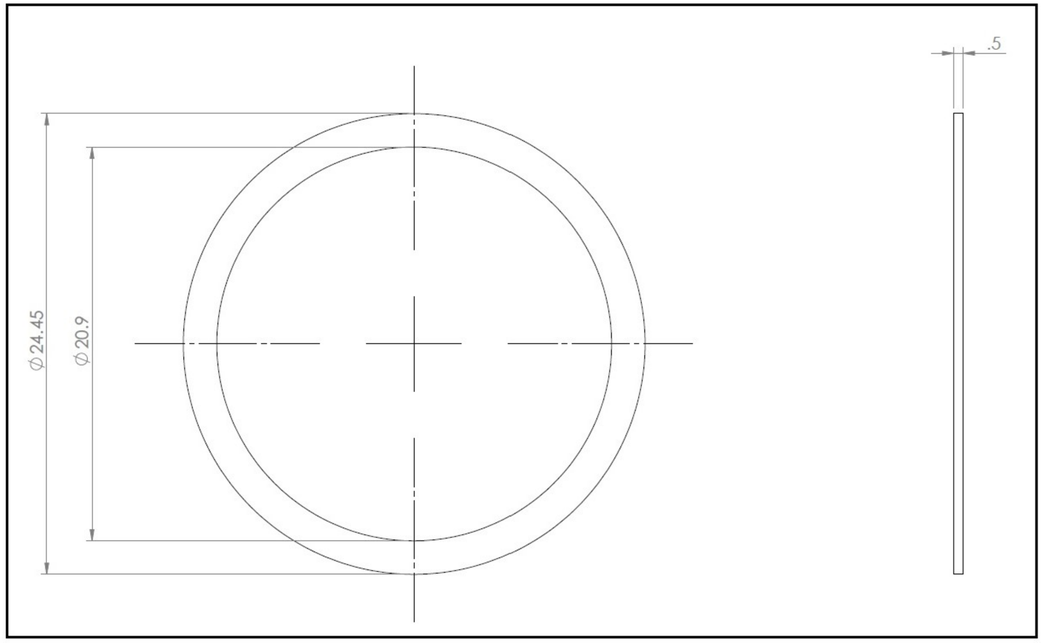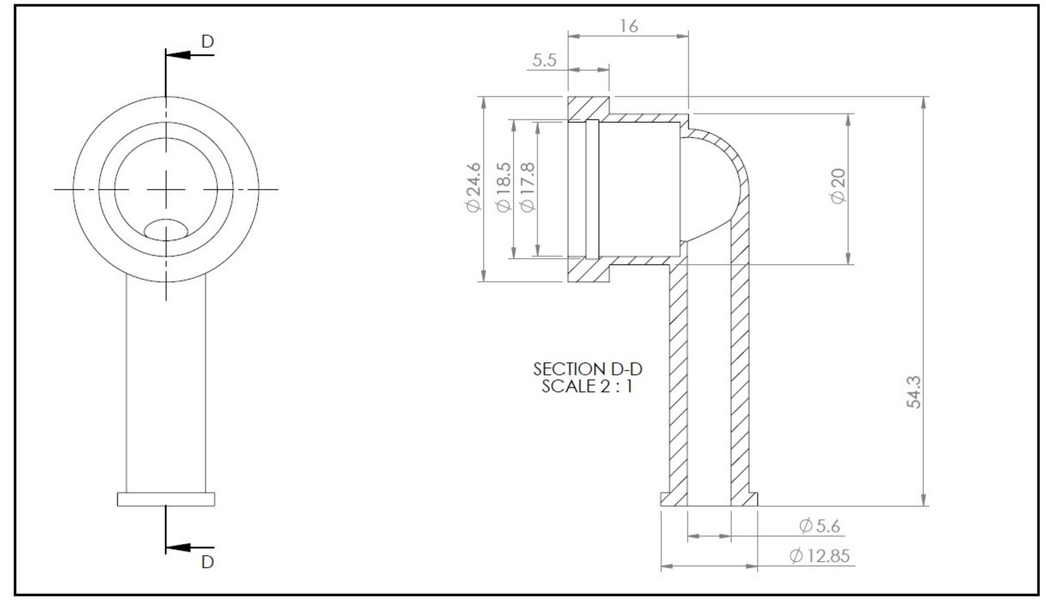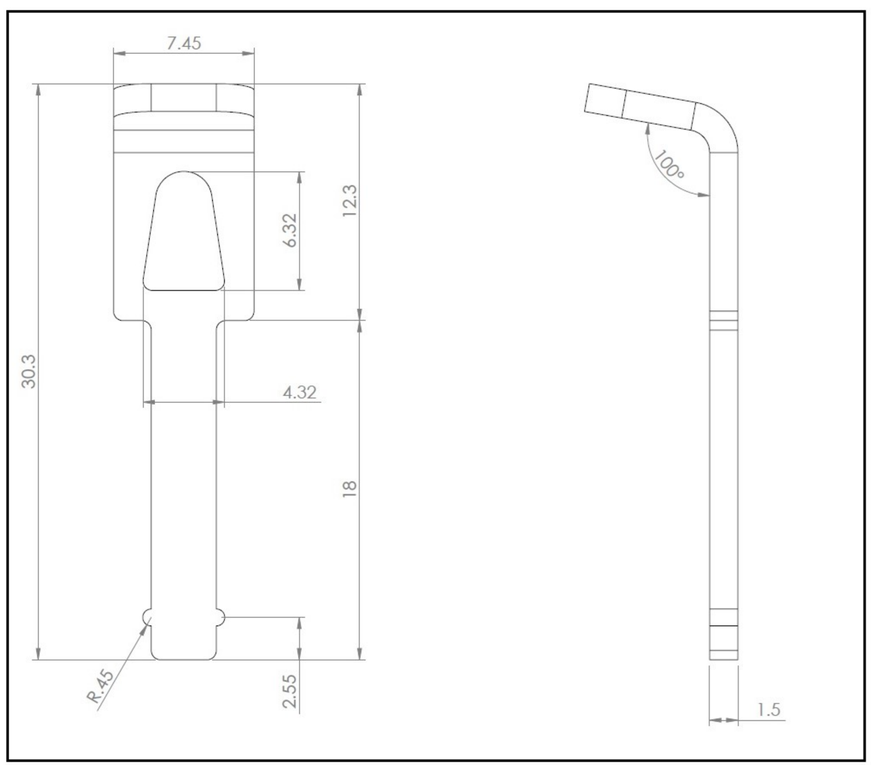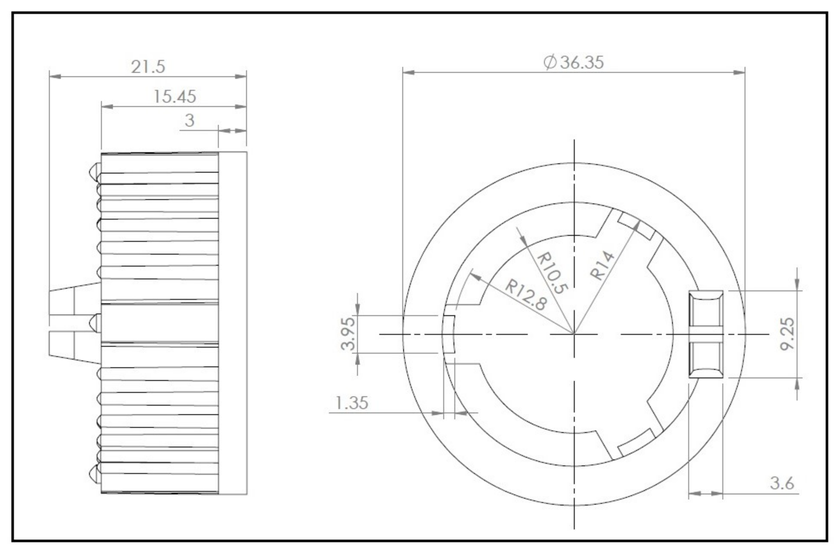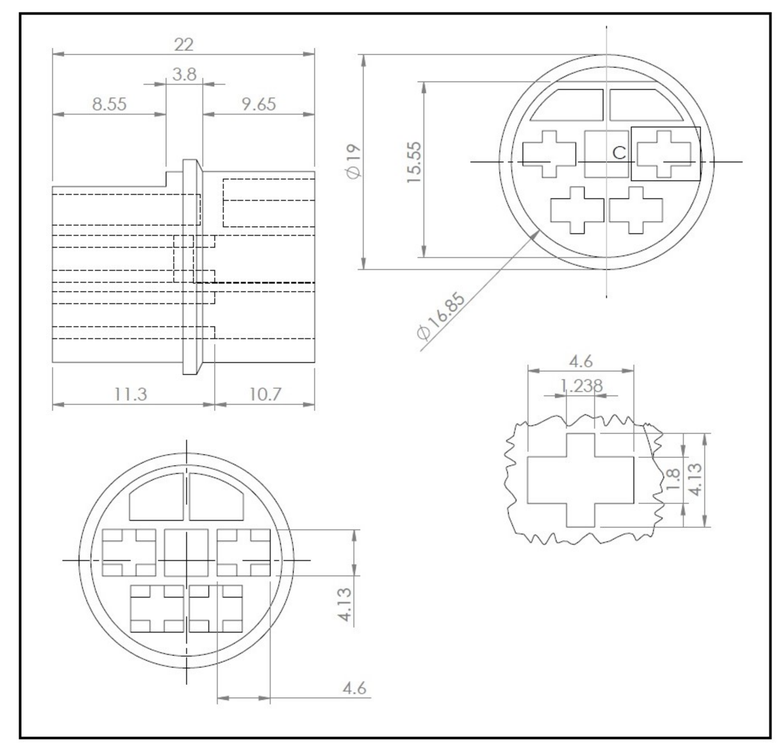Drawing and Dimension