DIMENSIONS

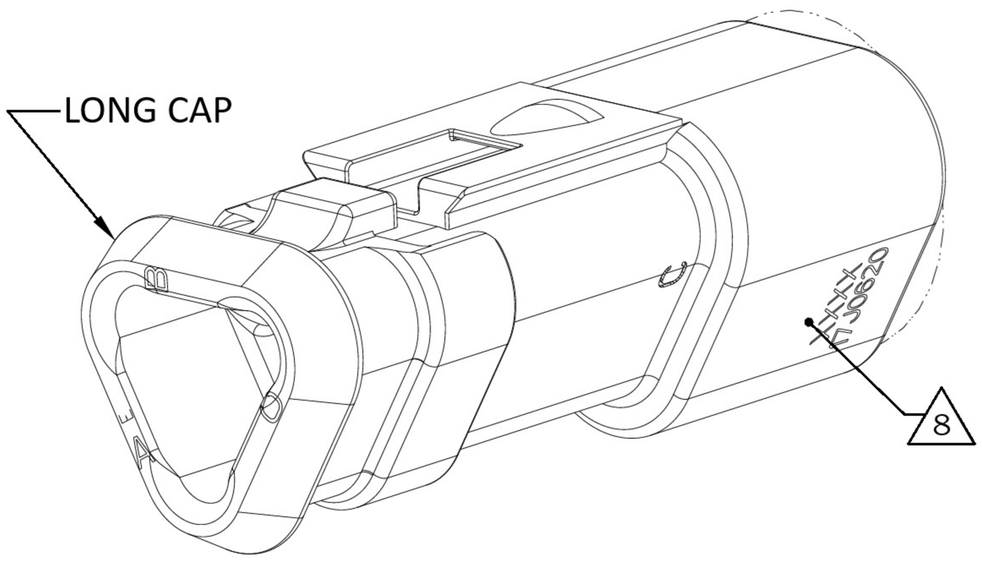

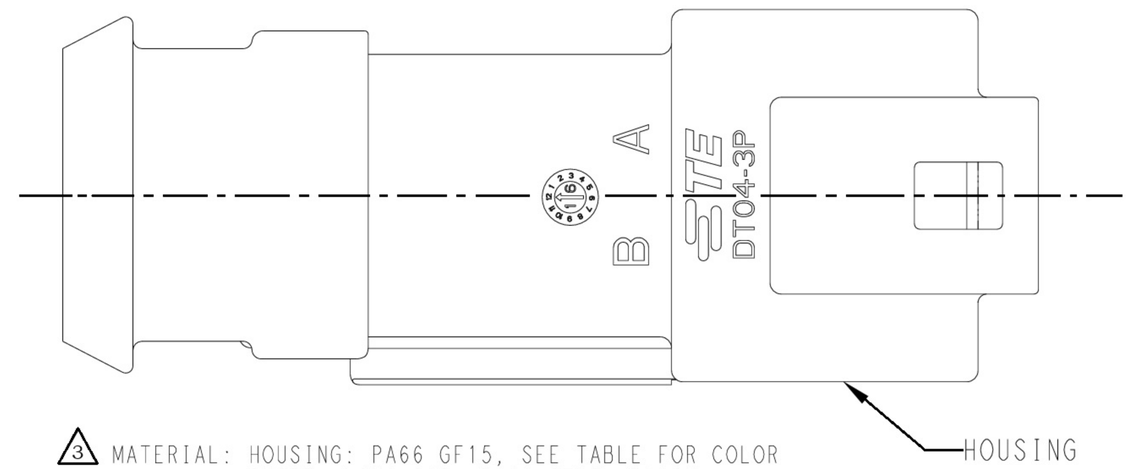

3 MATERIAL: HOUSING: PA66 GF15, SEE TABLE FOR COLOR
SHORT, LONG CAP: PA66 GF15, BLACK
GROMMET: VMQ N-SEAL: RED-ORANGE
E-SEAL: BURNT RED

5 "E" IDENTIFIES E-SEAL. BLOCKED: RED-ORANGE

8 ADDITIONAL MARKING PER NOTE 4 AND 7 EXCLUSIVELY FOR PARTS WITH CAPS PRODUCED IN CHINA.

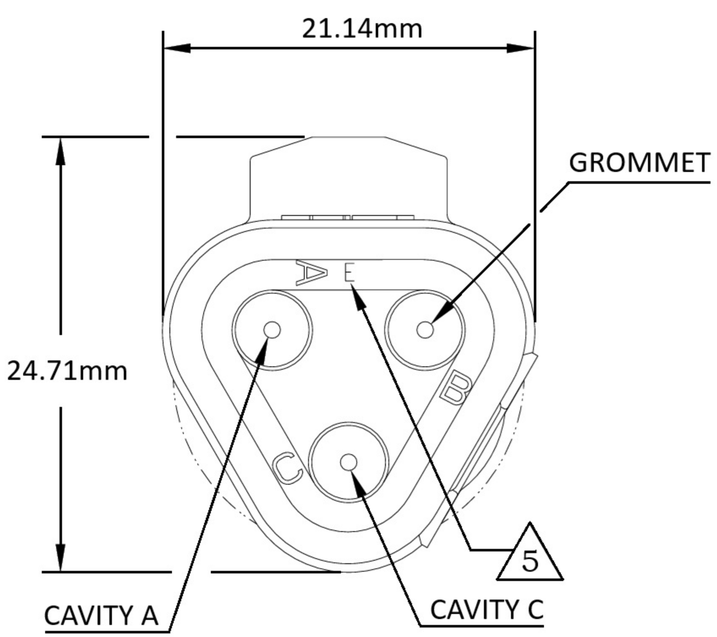

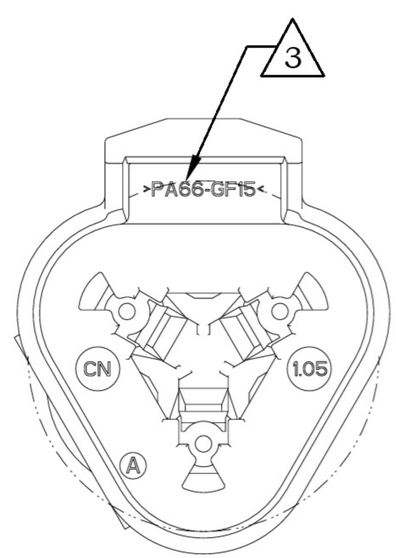

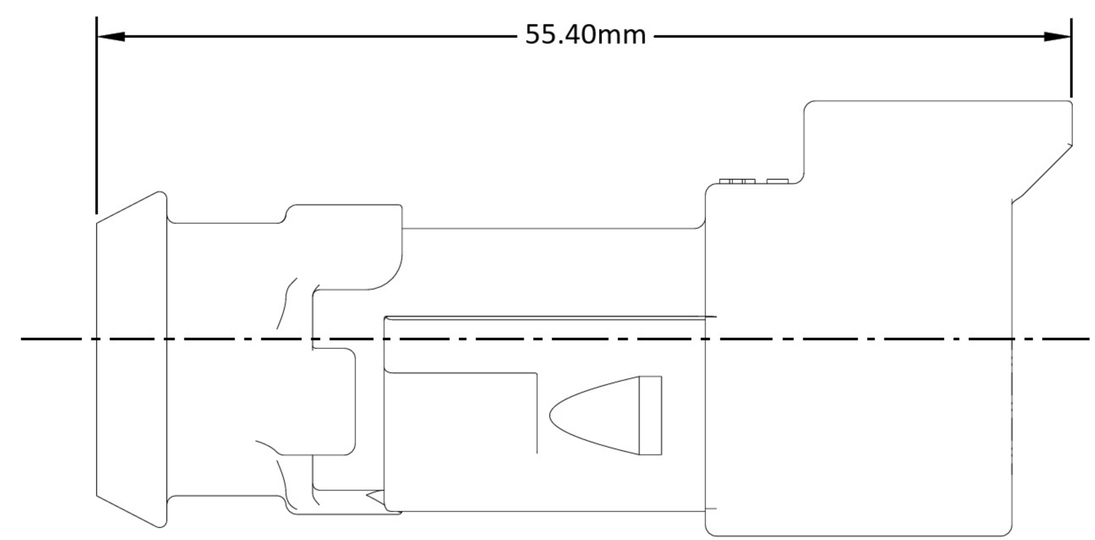

FIGURE 3
LONG CAP