DIMENSIONS

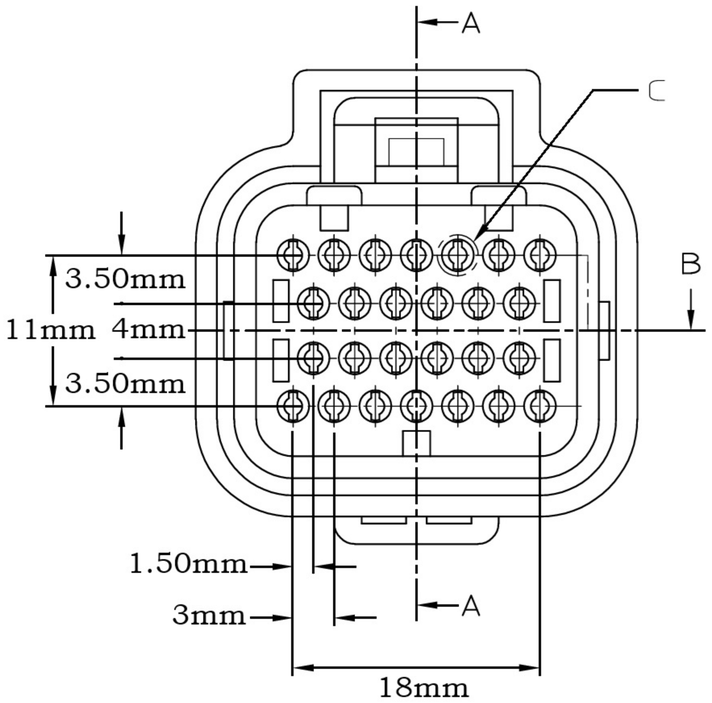

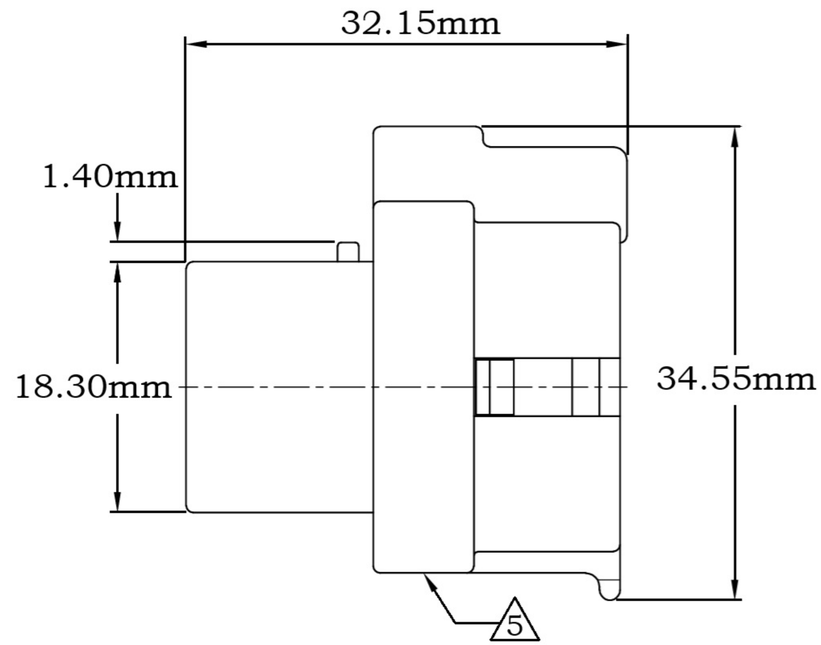

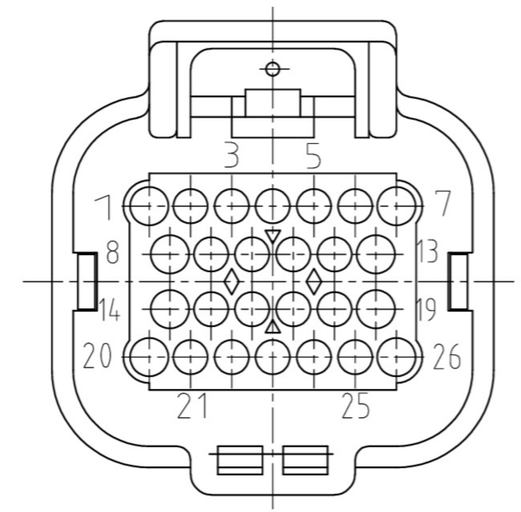

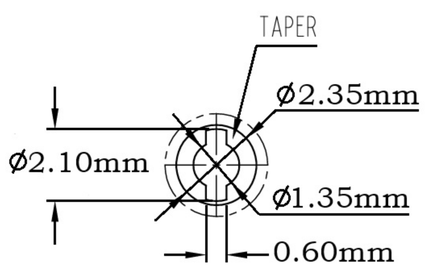

DETAIL "C" (5/1)

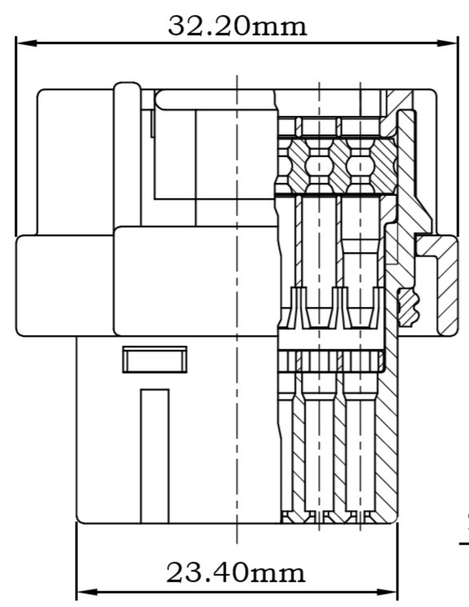

SECT. "B"

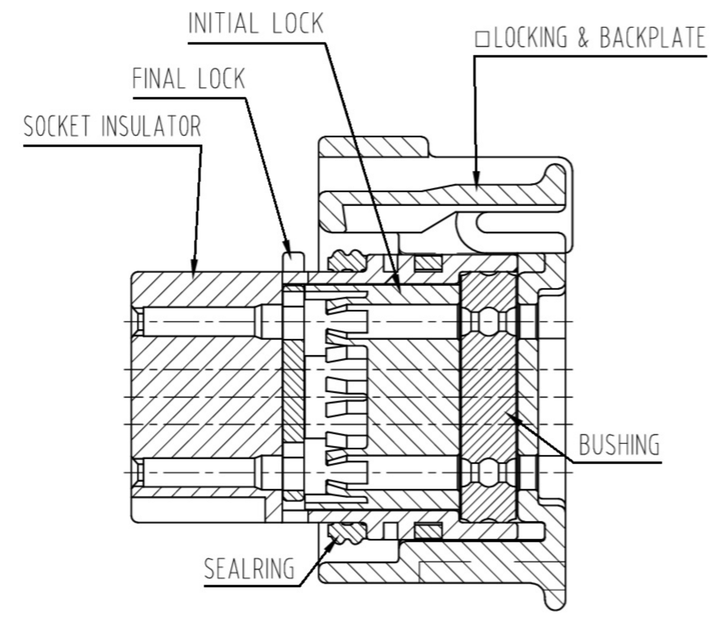

SECT. "A" – "A"