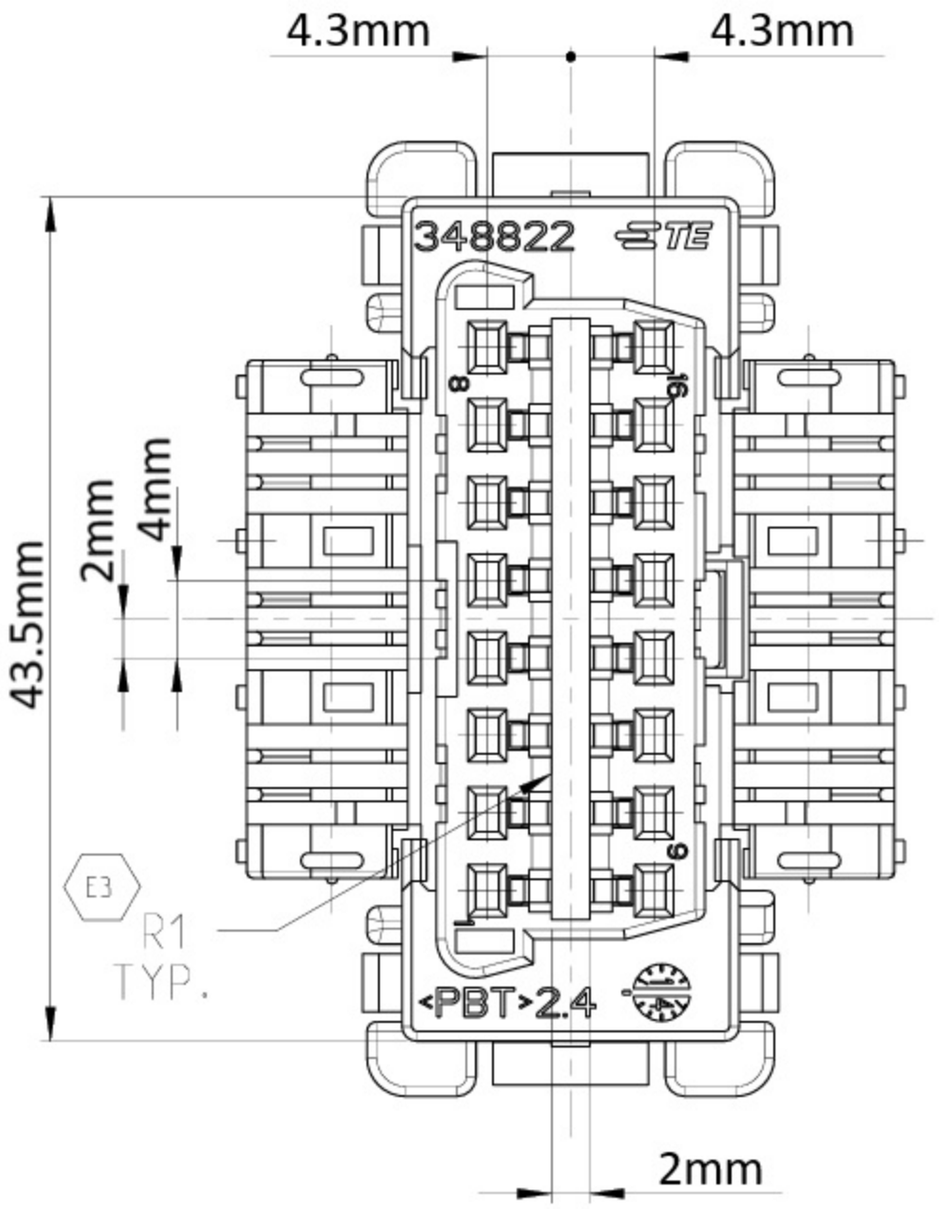
4.3mm
4.3mm
348822
TE
8
16
9
1
43.5mm
2mm
4mm
E3
R1
TYP.
<PBT>2.4
2mm

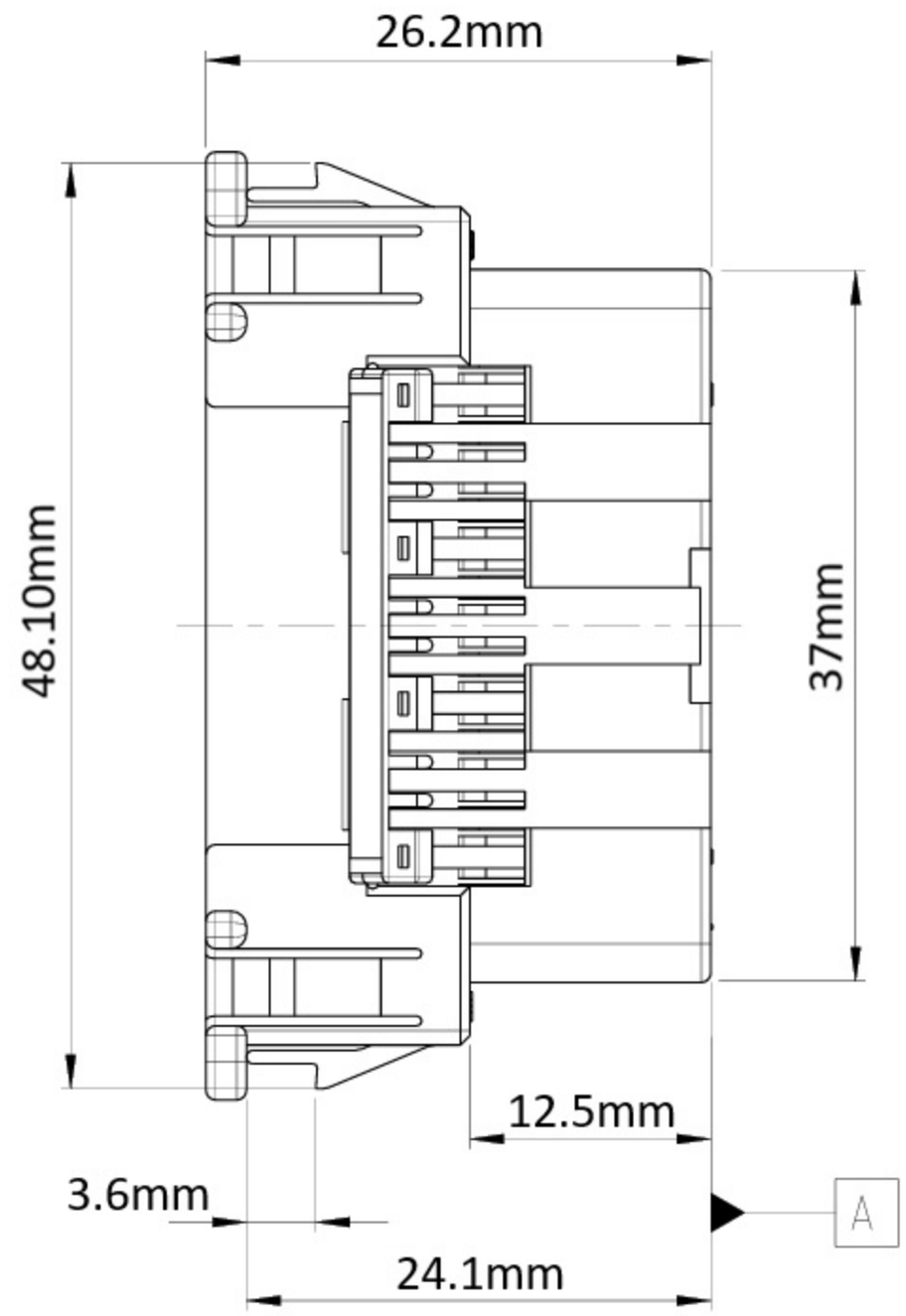
26.2mm
48.10mm
37mm
12.5mm
3.6mm
24.1mm
A

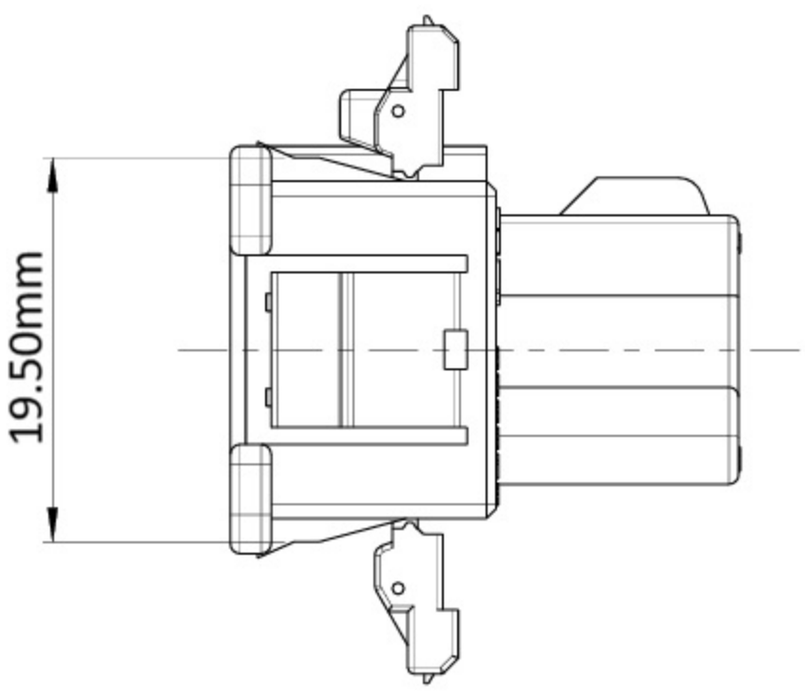
19.50mm

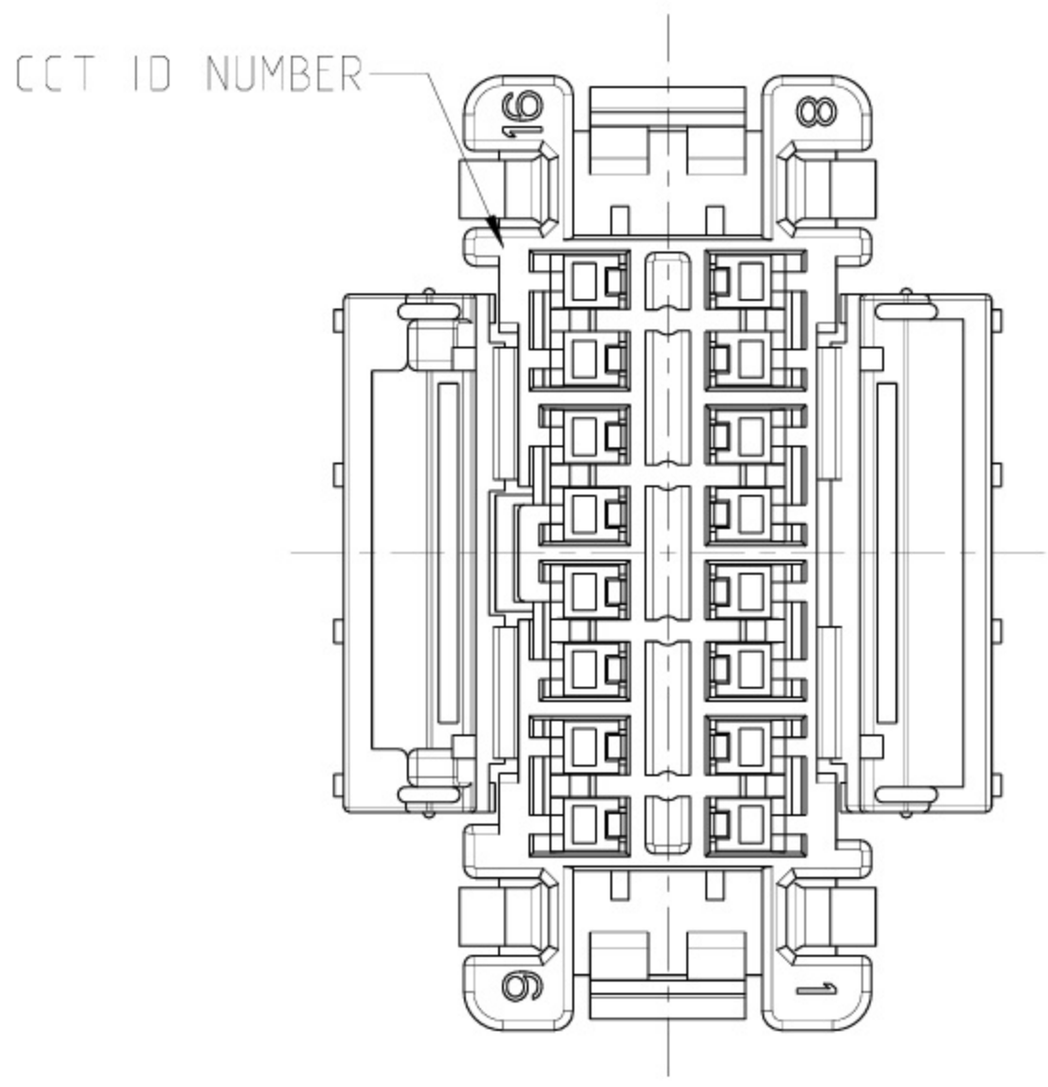
CCT ID NUMBER
16
8
9
1