DIMENSIONS

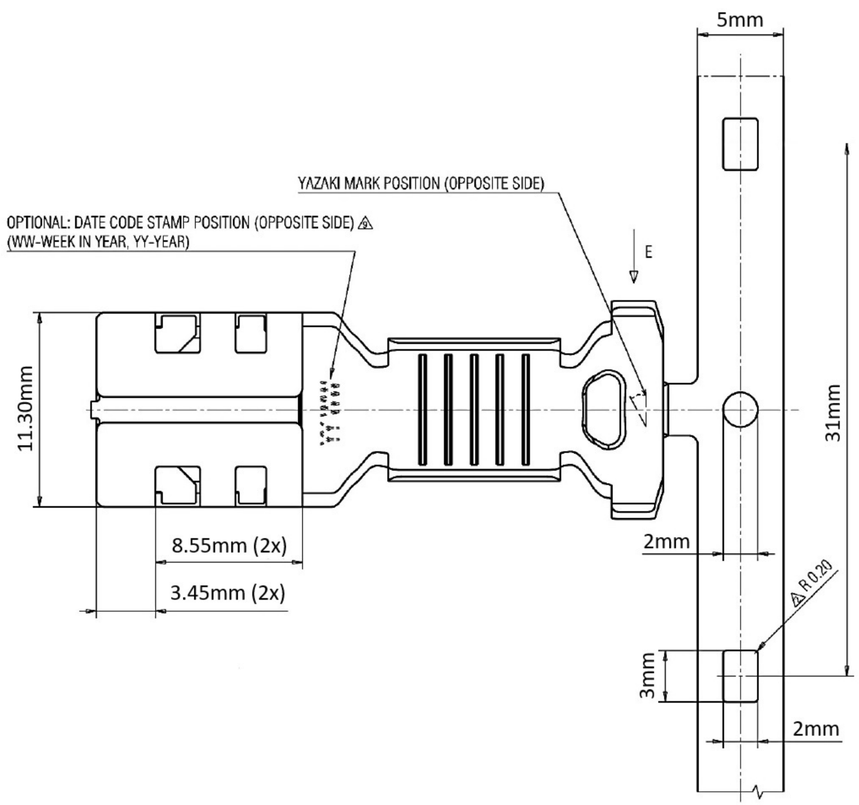
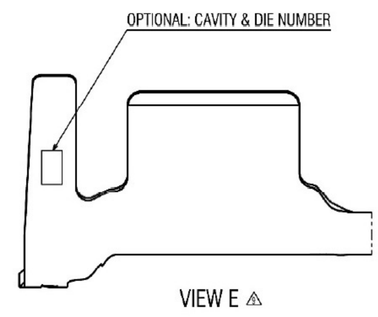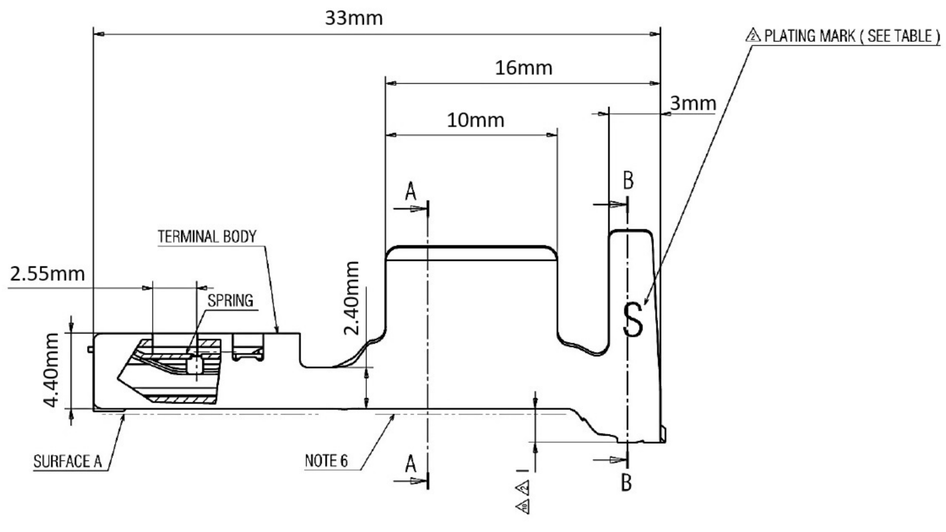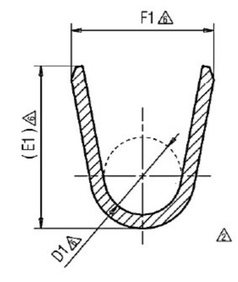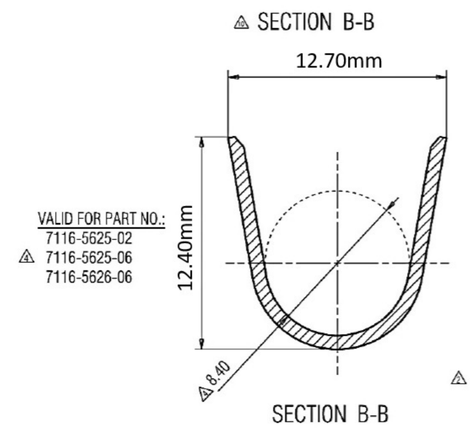
WIRE SIZE (mm^2)	PART NUMBER	APPLICATION △10	D1	E1	F1	I △10	MASS (g)	PLATING	PLATING MARK
10-16	7116-5625-02	SEALED UNSEALED	4.50mm	9.50mm	8.30mm	1.95mm	4.90mm	tin-silver (NOTE 7.1)	S
	7116-5625-06		4.50mm	9.50mm	8.30mm	1.95mm		silver (NOTE 7.2)	L