H M W S INC.

BRACKET & BUILDS CATALOGUE
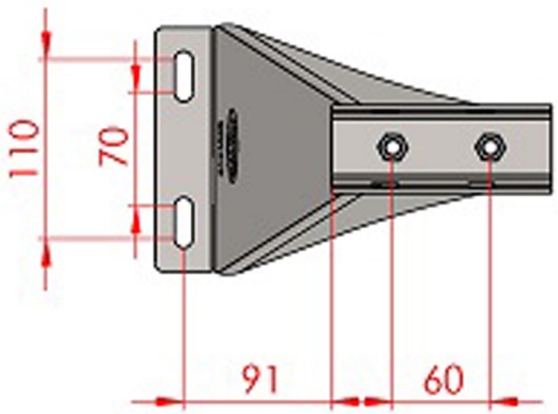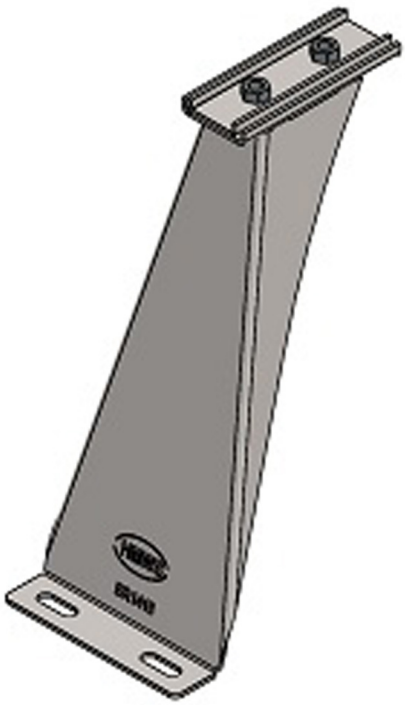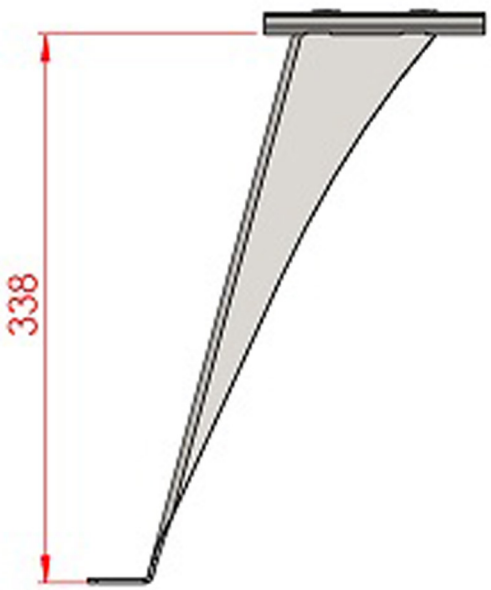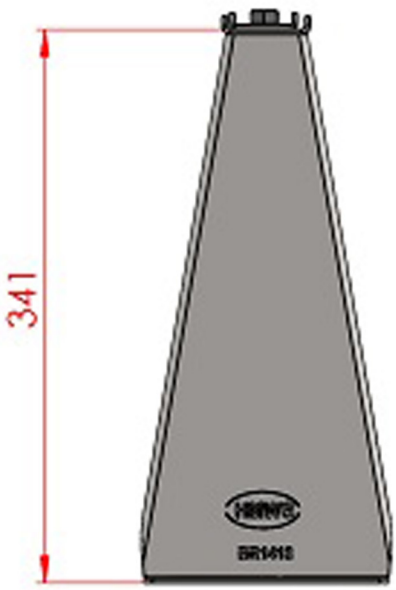
PART NUMBER	BR1418
DESCRIPTION	ISUZU EXTENDED TRUCK ROOF BAR FEET
MATERIAL	MILD STEEL
FINISH	WHITE RAL 9016 POWDER COAT
THICKNESS	3 mm
WEIGHT	1802 gms.