DIMENSIONS

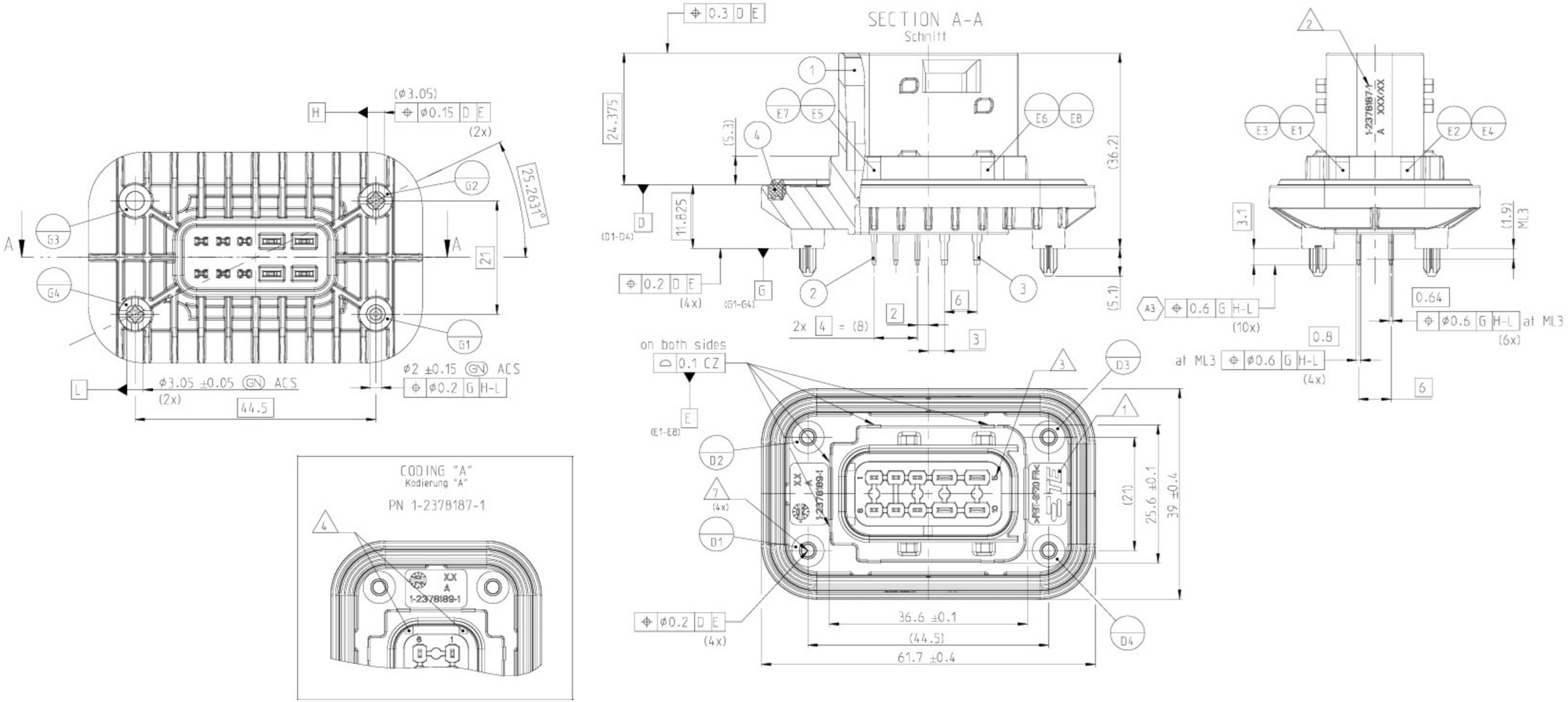
SECTION A-A
Schnitt
CODING "A"
Kodierung "A"
PN 1-2378187-1
44.5
61.7 ±0.4
36.6 ±0.1
39 ±0.4
25.6 ±0.1
25.263°
24.375
11.825
(36.2)
(5.1)
(5.3)
on both sides
at ML3