DIMENSIONS

Square Flange Receptacle
Type 20

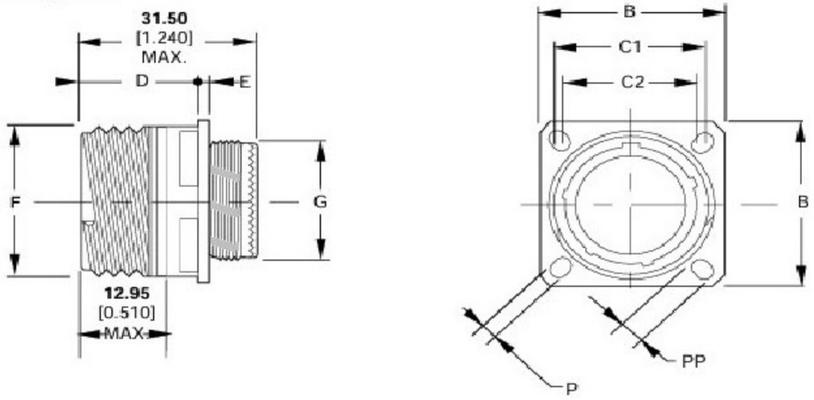

Shell Size	B	C1	C2	D Max.	E Max.	F	G	P	PP	Mass (g) by Shell Type
										Composite
25	46.00 1.811	38.10 1.500	34.93 1.375	20.10 0.791	3.20 0.126	41.10 1.618	36.90 1.453	3.91 0.154	6.15 0.242	61

Millimeters Inches

Keying Options
(Viewed from Mating Face of the Receptacle Connector)

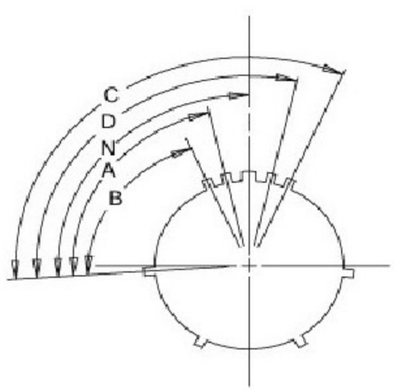

Shell Size	Key Position (Degrees)				
	N	A	B	C	D
25	95	80	69	121	110

Degrees in table above are the distance between Datum E (that bisects first minor keyway) and the center line of the master keyway

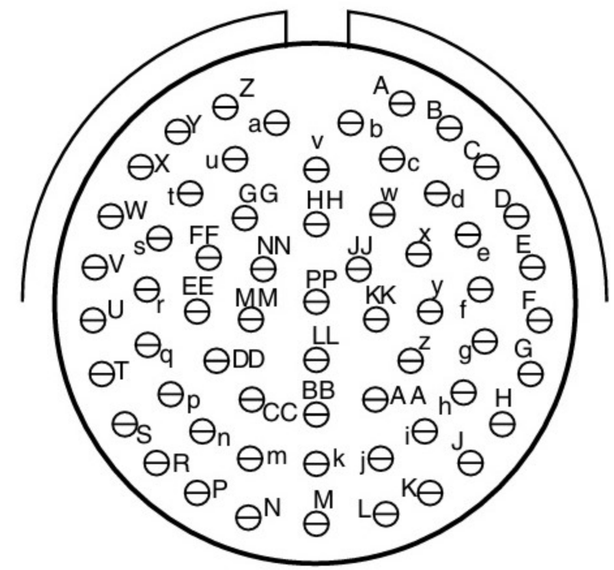

Shell Size & Insert Arrg. for:

Series III TV	25-61
Service Rating	I
Number of Contacts	61
Contact Size	20