DIMENSIONS

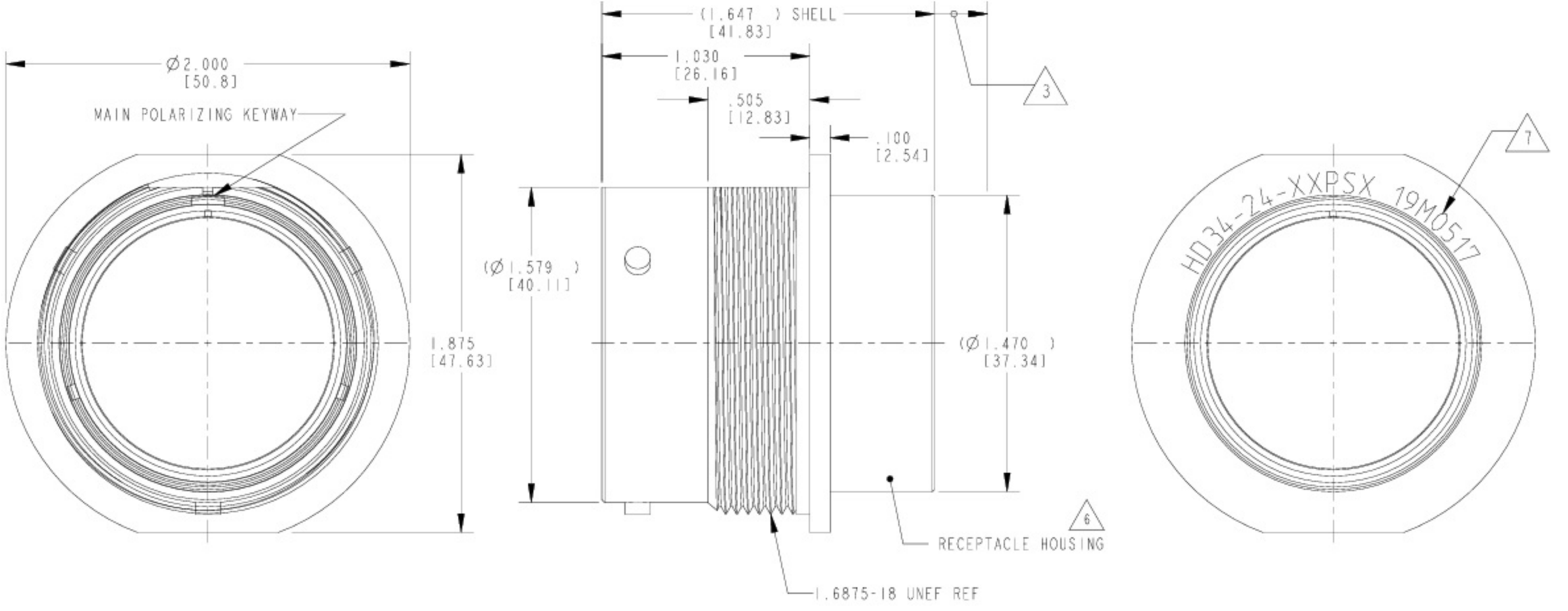
Ø2.000
[50.8]
MAIN POLARIZING KEYWAY
1.875
[47.63]
(1.647) SHELL
[41.83]
1.030
[26.16]
.505
[12.83]
.100
[2.54]
3
(Ø1.579)
[40.11]
(Ø1.470)
[37.34]
6
RECEPTACLE HOUSING
1.6875-18 UNEF REF
7
HD34-24-XXPSX 19M0517